charnwood

Woodworking machinery at its best!

SPINDLE MOULDER
OWNERS MANUAL

MODEL: W030

Charnwood, Cedar Court, Walker Road,
Hilltop Industrial Estate, Bardon Hill, Leicestershire, LE67 1TU

Tel. 01530 516 926 Fax. 01530 516 929
email: sales@charnwood.net website: www.charnwood.net

Forward

These instructions are important, the information contained herein is essential for the correct build and operation of the machine and the safety of its operator.

The machine is equipped with various safety devices to protect itself and the operator. However, these devices cannot cover all eventualities and a thorough understanding of spindle moulding techniques, good workshop practice plus the controls and operation of this machine are essential for your safety.

Do not operate the machine until you have read and understood all the instructions in this manual and are familiar with both the machine and spindle moulding techniques.

Use of the Machine

Purpose

This machine is designed for moulding along and across the grain of prepared timber, using cutters and limiters, correctly mounted in a standard Euro type cutter block.

It is designed for use by one operator.

Operator Qualifications/Training

Operators of this machine should have a suitable qualification in the use of woodworking machinery, including spindle moulders or should have been trained by someone holding such qualifications.

GENERAL SAFETY RULES

WARNING: Do not attempt to operate the machine until you have read thoroughly and understood completely all instructions, rules, etc. contained in this manual. Failure to comply may result in accidents involving fire, electric shock, or serious personal injury. Keep this owner's manual and review it frequently for continuous safe operation.

1. Know your machine. For your own safety, read the owner's manual carefully. Learn its application and limitations, as well as specific potential hazards pertinent to this machine.

2. Make sure all tools are properly earthed.

3. Keep guards in place and in working order. If a guard must be removed for maintenance or cleaning, make sure it is properly replaced before using the machine again.

4. Remove adjusting keys and spanners. Form a habit of checking to see that the keys and adjusting spanners are removed from the machine before switched it on.

5. Keep your work area clean. Cluttered areas and workbenches increase the chance of an accident.'

6. Do not use in dangerous environments. Do not use power tools in damp or wet locations, or expose them to rain. Keep work areas well illuminated.

7. Keep children away. All visitors should be kept a safe distance from the work area.

8. Make workshop childproof. Use padlocks, master switches and remove starter keys.

9. Do not force the machine. It will do the job better and be safer, at the rate for which it is designed.

10. Use the right tools. Do not force the machine or attachments to do a job for which they are not designed. Contact the manufacturer or distributor if there is any question about the machine's suitability for a particular job.

11. Wear proper apparel. Avoid loose clothing, gloves, ties, rings, bracelets, and jewellery which could get caught in moving parts. Non-slip footwear is recommended. Wear protective hair covering to contain long hair.

12. Always use safety glasses. Normal spectacles only have impact resistant lenses. They are not safety glasses.

13. Do not over-reach. Keep proper footing and balance at all times.

14. Maintain machine in good condition. Keep machine clean for best and safest performance. Follow instructions for lubrication and changing accessories.

15. Disconnect the machine from its power source before servicing and when changing accessories.

16. To avoid accidental starting, make sure the switch is in the OFF position before plugging in the mains cable.

17. Never leave the machine running unattended. Turn the power off. Do not leave the machine until it comes to a complete stop.

18. Do not use any power tools while under the effects of drugs, alcohol or medication.

19. Always wear a face or dust mask if operation creates a lot of dust and/or chips. Always operate the tool in a well ventilated area and provide for proper dust removal. Use a suitable dust extractor.

EXTRA RULES FOR SPINDLE MOULDERS

1. A spindle moulder should never be used by an untrained operator. Proper training is essential for the operator's safety.

2. The machine must be properly maintained and the correct fitting of all guards checked.

3. Guards should be of such a design and fitted in such a way that they keep fingers out of an area of 50 mm (2 inches) beyond the sweep of any cutter that might be used.

4. Always ensure that you use safe working procedures and that you understand what you are doing.

5. Wear appropriate clothing. Long loose sleeves, long hair or anything else that could get caught in the machine should be tied back or otherwise secured.

6. Never use this spindle moulder for curved work, without a Ring Fence fitted.

7. **NEVER** use a cutter block without limiters.

8. Feed the workpiece to the cutter block or router bit against the direction of rotation.

9. Never draw the workpiece back during cutting. Wait until the block stops rotating before pulling the workpiece back.

Risk of injury! Never reach into moving tooling.

Wear Eye Protection

Wear Ear Protection

Specification

Main table surface	600 x 400mm
Sliding table size	400 x 180mm
Sliding carriage stroke	400mm
Table height	870mm
Weight Net/Gross	95kg/120kg
Spindle diameter	30mm
Maximum Tooling Diameter	150mm
Rotation speeds	4(1400/4000/6000/9000) rpm
Spindle length available for tooling	105mm
Spindle rise and fall	110mm
Table aperture (with inserts)	160mm (110/75mm)
Table aperture depth	50mm
Motor (induction)	240V, 1500W 2hp single phase
Extractor outlet	100mm
Rating	Light trade
Warranty	1 year

Rating

Light Trade: Suitable for professional woodworkers where the machine will not be in daily use.
Mid-range machines with a heavier build and more power. Typically used by 2 or 3 people within a small business and also for the dedicated hobbyist with a larger budget. It is expected to be used up to the machines maximum limit with occasional long work periods. Suitable for income generation.
Expected maximum use of 300 hours annually.

Unpacking

	This product is shipped in 3 Pieces: 1 wooden crate and 2 cartons. To open the wooden crate cut the strapping and lift the lid of the crate from the base.
	Remove the loose items surrounding the machine. Open the blue door situated on the front of the machine. Remove the handwheel which is packed inside. The machine is fixed to the base with two bolts. Use a 13mm spanner to undo the 2 securing nuts.

Please Note: Do not dispose of any packaging until the machine has been fully assembled and tested. In the unlikely event of a problem which requires the product to be returned, the packaging will need to be re-used.

Open the remaining cartons, unpack all the components and check everything is present.

Assembly

	To assemble the base. Locate: 4 Panels 4 Feet 12 x M6 Bolt, Washer and nut
	Screw the 4 feet into the threaded holes in the 2 side panels of the base. Use a 17mm spanner to tighten them. After full assembly of the machine, the feet can be adjusted to level up the machine.

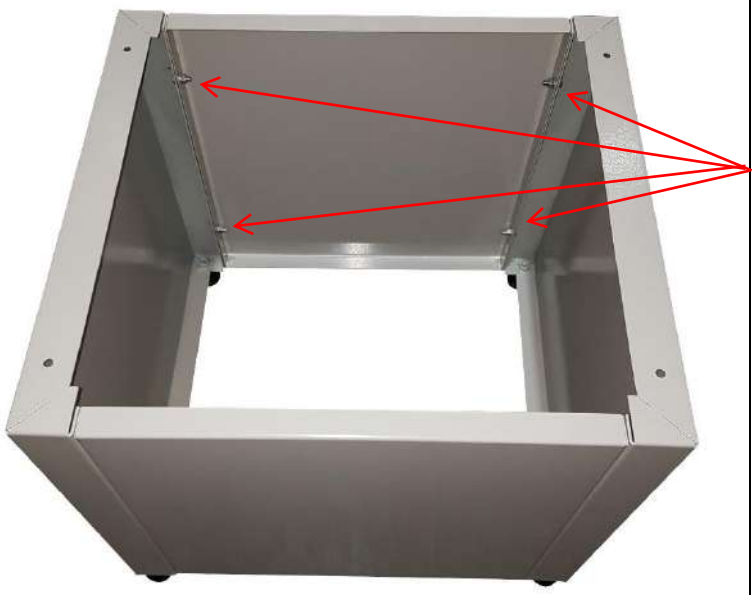	Use 8 of the bolts, washers and nuts to join the 4 panels together. Fit all 8 bolts finger tight before tightening with a 10mm spanner.
	Having unbolted the machine from the pallet and removed any loose items which are packed around and inside it. Turn the body of the machine upside down and sit the assembled base onto it.

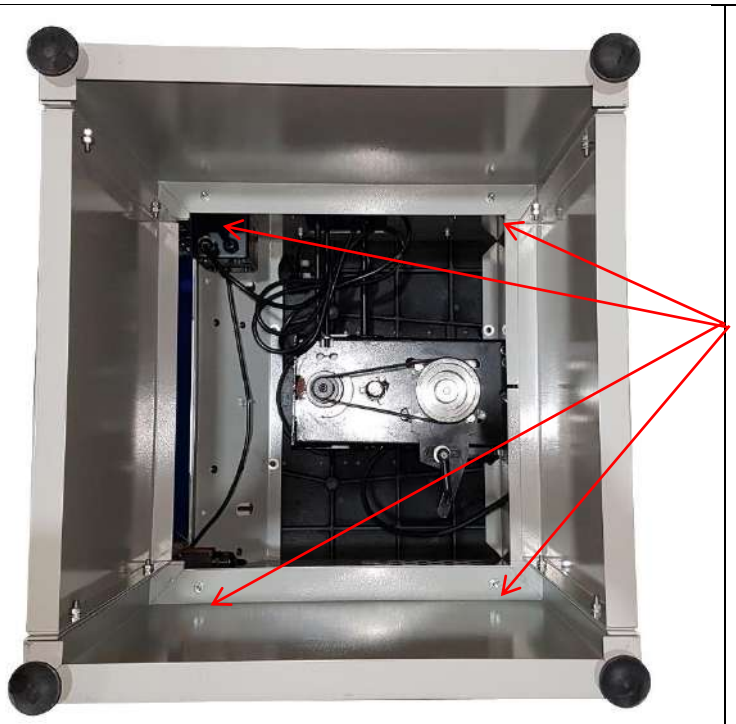	Use the remaining 4 bolts, washers and nuts to attach the base to the machine. Once all of the nuts and bolts are tight. Turn the machine the correct way up and stand it on the feet. Adjust the feet to level up if necessary.
	Fit the hand wheel to the rise and fall control shaft and tighten the grub screw.
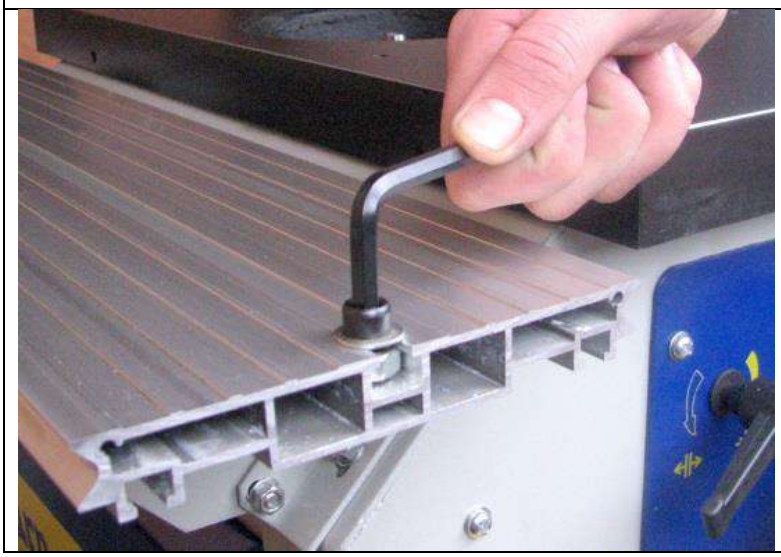	Remove one of the stop screws from the sliding carriage rail.

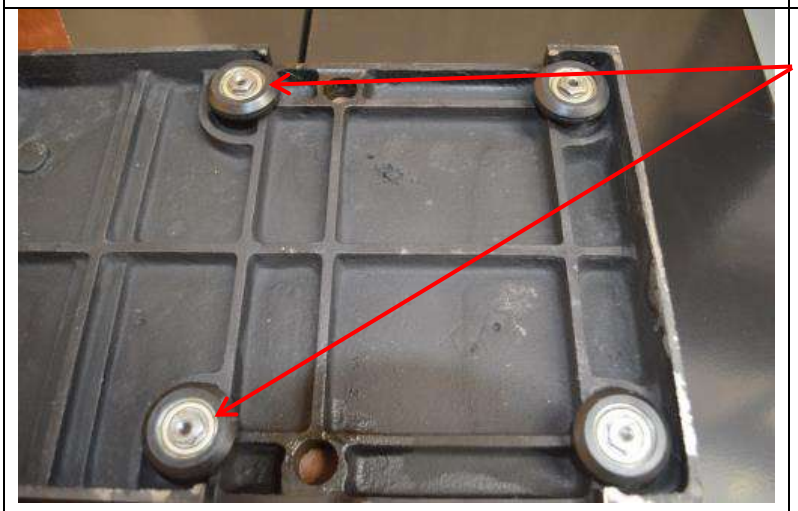	Before fitting the sliding carriage it should be noted that the two outboard bearing wheels are mounted on eccentrics.
	Should it ever be necessary their position can be adjusted with the aid of a 14 mm spanner.
	Slide the sliding table on to the guide rail, ensuring the guide rollers engage with the channels running either side of the rail.

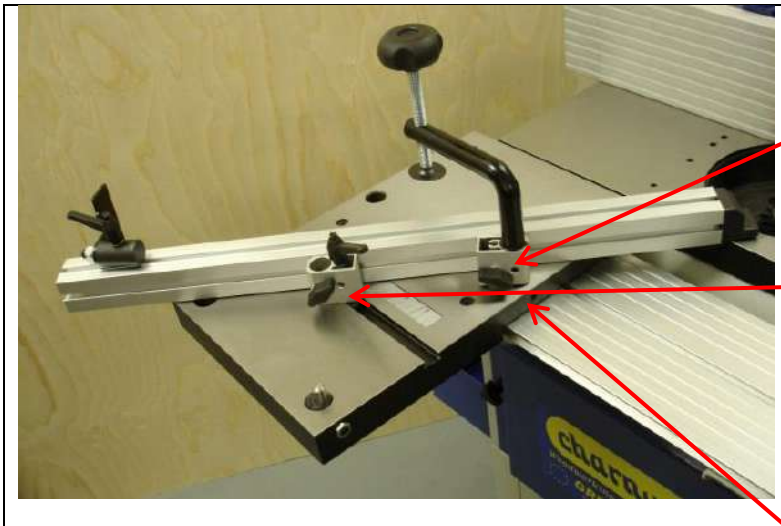	Place the crosscut fence with the open side face down and the plastic tip to the right. Slide the pivot block and the locking block onto the back side of the fence with the head of the bolt in the T-slot. The Locking block has a T-shaped foot plate, slide it into the slot in the table. The Work clamp passes through the pivot block and locates in the large hole at the front of the carriage. The work clamp should be locked in place using the small grub screw in the front edge of the carriage.
	Fit the flip-over length stop by feeding the head of the bolt into the T-shaped slot on the top side of the fence. The ratchet handle locks the stop in place. The stop plate can be flipped over to engage or disengage it.
 	From underneath the carriage, push up the locating stop pin. Use a square to check the crosscut fence is set at 90 degrees to the blade when it is pressed against the stop pin. If necessary, adjust the stop by loosening the locking ring and grub screw. Put a screwdriver into the slot to rotate the stop to set the angle.

	Here you can see the tapered end of the spindle.
	Locate the spindle lock on the right hand side of the machine. Rotate the tapered spindle slowly whilst pushing the locking bar inwards. When the lock engages the bar will slide in around 10mm and the spindle will be locked. Pull the bar out to unlock the spindle.
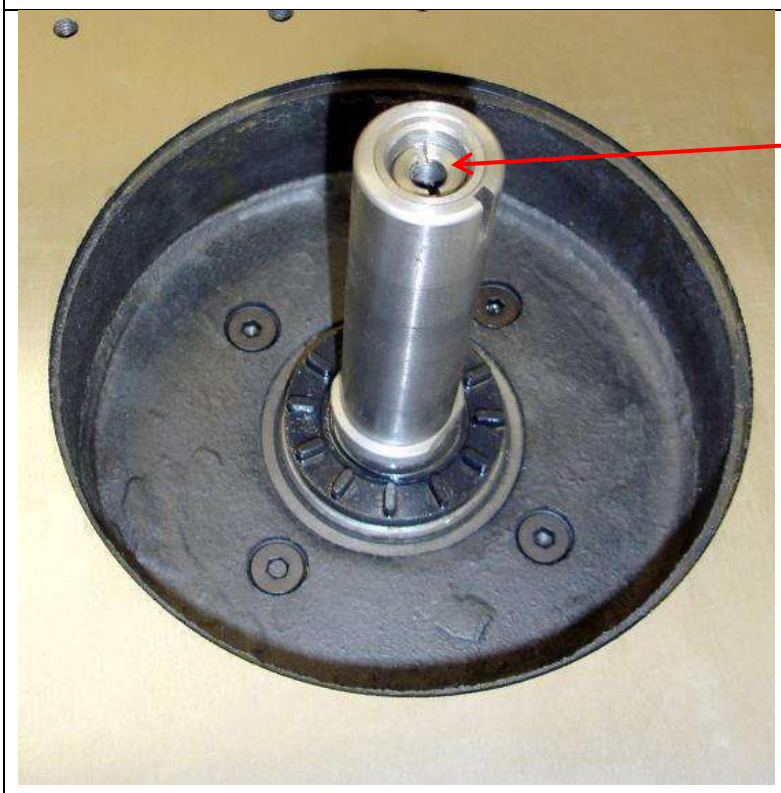	With the tapered spindle locked, fit the upper spindle. Use a flat screwdriver to unscrew the locking ring in the centre of the upper spindle. Place the upper spindle over the taper and tighten the retaining screw by passing a 6mm Allen key into the centre of the spindle. Next use the flat screwdriver to tighten the locking ring down onto the head of the retaining screw. *Warning: Failure to tighten the locking ring may result in the arbor and cutter block coming loose.*

	If the bolt holding the upper and tapered spindle together ever comes loose, it will be necessary to use the special spanner provided to hold the upper spindle in place whilst unlocking the top bolt.
	The router collet is mounted onto the tapered spindle in the same way. When changing the router cutter, take the precaution of checking the centre retaining bolt is tight.

Assemble the Fence

	On top of the hood, you will find four screws. Remove the screws and attach the hinged top cover as shown below. At the rear of the cutter hood is the connection for a 100mm diameter dust extraction hose to be fitted.

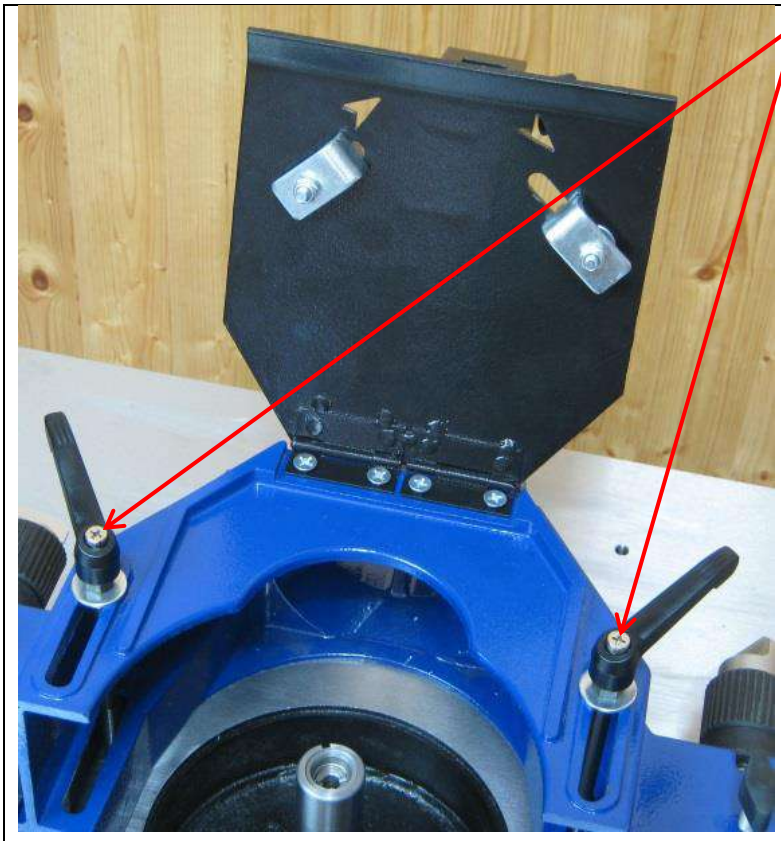

Fit the 2 long bolts through the slots in the hood and then screw them into a pair of holes in the table.

The hood can be fixed in different positions depending on the size of the work piece.

The cover is hinged to provide quick access to the spindle to change the tooling.

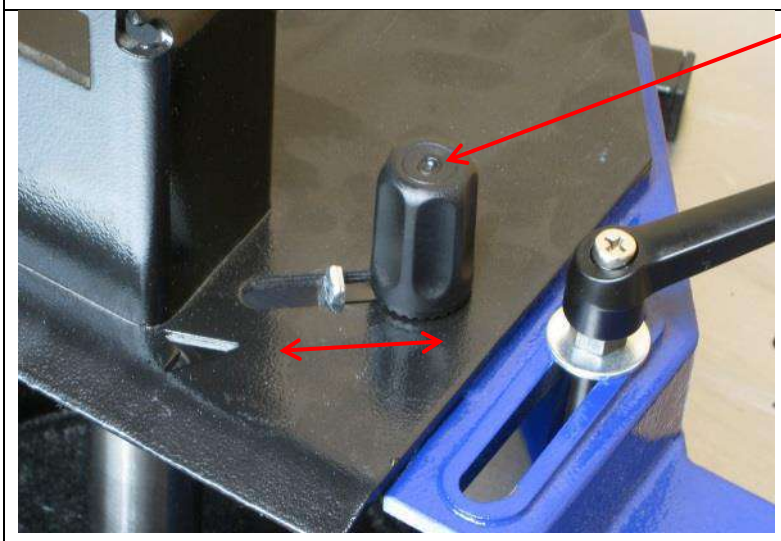

To lock the cover down, unscrew the locking knob, slide the clamp away from the centre of the hood so that the tongue fits under the hood, tighten the locking knob. Do the same on the other side.

This cover MUST be closed and locked when the machine is in operation.

Fence depth Adjust screw Fence depth lock knob

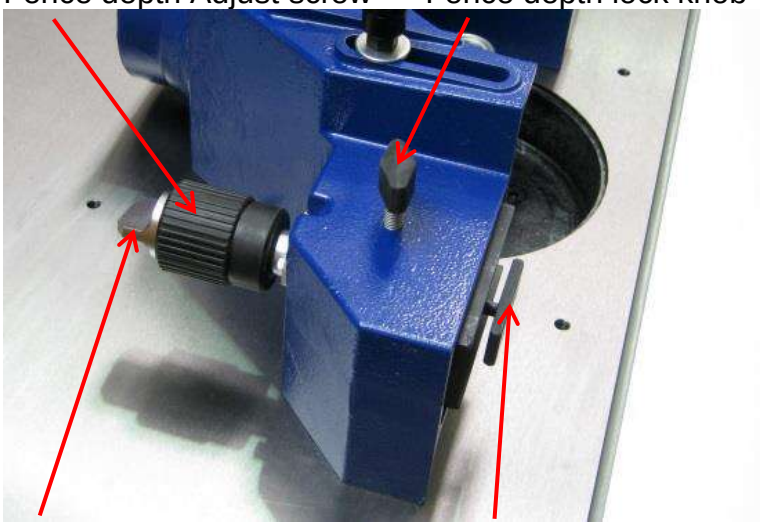

Fence width lock Fence fixing plate

Loosen the fence depth locking knob and the silver fence width lock.

Slide the fence over the fixing plate so that the mitred end of the fence is closest to the spindle.

Wind the fence depth adjusting screw, so that the fence sits back against the hood, then lock it in place with the depth locking knob and the fence width lock.

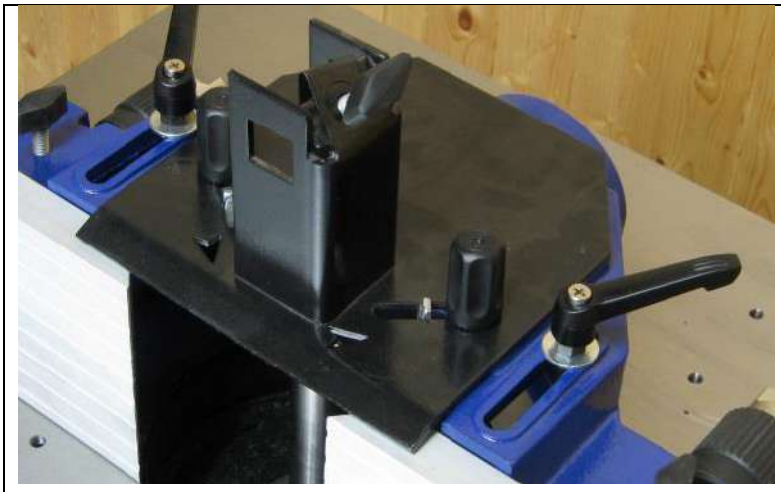	Assemble the front guard and clamp.
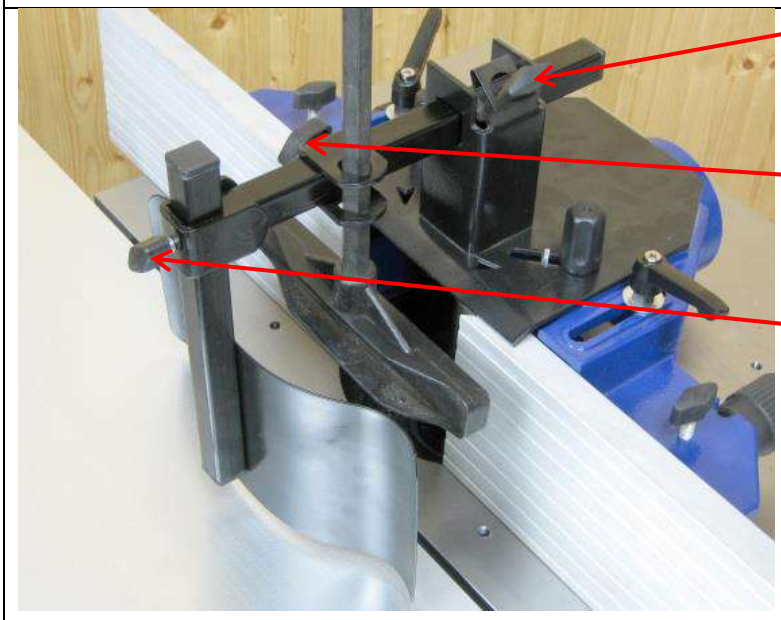	Fit the square bar into the hood cover and lock it with the thumbscrew. Slide the vertical hold down onto the square bar and lock it with the thumb screw. Fit the front spring guard into the end of the square bar and lock it with the thumb screw. With these correctly set, the work piece is held firmly against both the table and the fence. Never operate the spindle moulder without them.

Fitting a Cutter block

A cutter block (not included as standard) is shown here correctly assembled.

The larger of the two table inserts is fitted into the table aperture. Always fit the smallest table insert which the tooling allows.

A large selection of spacers, in varying widths are provided so that the cutter block can be located at any height on the spindle.

When stacking the spacers, ensure that the one with the roll pin is at the top of the stack. The pin engages with the slot in the top of the spindle.

Not all of the spacers will be used at the same time.

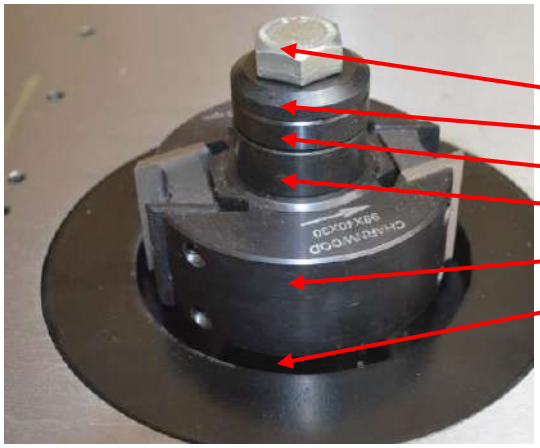

Before fitting the cutter block onto the spindle, engage the spindle lock.

Now fit, (in reverse order):
Locking bolt
Top cap
Locking spacer with the roll pin
Spacers
Cutter block
Spacers

The locking bolt must be firmly tightened.

Once the stack on the spindle is tight, release the spindle rotation lock, before starting the machine.

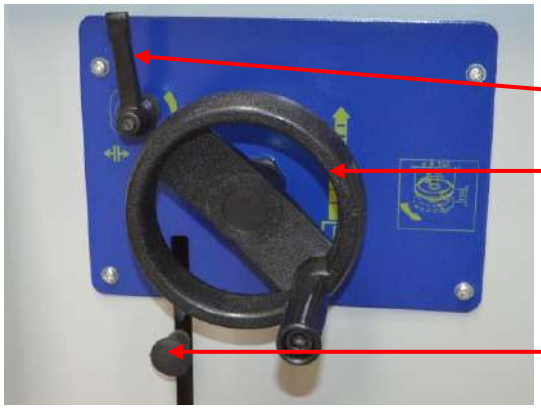

The Spindle Controls

Spindle Height Locking Lever

Rise and fall hand wheel.
One complete turn raises or lowers the arbor by 2 mm (0.08”).

Spindle Rotation Lock

The power supply cable will be found inside the base cabinet.

The cable gland should be fitted to the cut out in the door lower flange and the locking nuts tightened

Changing Speeds

The spindle moulder has 4 speeds.

To change speed:

Unscrew the knob and open this access door.

(The machine is fitted with a micro switch and will not run when this door is open)

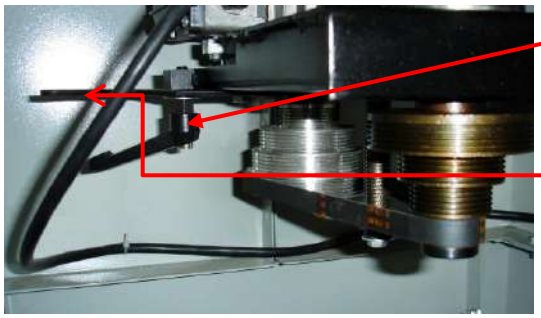

Slacken off the locking lever

Reduce the tension on the drive belt by moving this lever.

Move the drive belt to the pair of pulleys which give the required speed, re-tension the belt and then tighten the locking lever.

Operating the Spindle Moulder

It is assumed that anyone purchasing a spindle moulder has been trained to operate this type of machine competently. Such training is beyond the scope of this manual.

Spindle rotation speeds:

1500rpm - Drum Sanding *
4500rpm - Moulding Hardwoods
6500rpm - Moulding Softwoods
8500rpm - Routing *

* It should be noted that sanding and routing accessories are optional extras.

Limiters: Never use a cutter block without limiters fitted.

Fences: Close the two fences together so the edges are just missing the cutter.
This improves the support for the work piece and is best practise for safety reasons.
Always adjust the fences so that the work is fully supported. If the cut removes the whole edge of the work piece, step the out-feed fence forward as appropriate.

Set the vertical hold down to contact the top of the work piece.
Set the front guard spring to hold the work piece up against the fences.
Use a push stick to feed small work pieces through the cutter block.

Always feed the work against the direction of rotation (from right to left).

Declaration of Conformity

Charnwood Declare that Woodworking Vertical Spindle Moulder, Model W030

Conforms with the following EU Directives: Machinery Directive 2006/42/EC
Low Voltage Directive 2006/95/EC

Conforms with the following UK Regulations: Supply of Machinery (Safety) Regulations 2008
Electrical Equipment (Safety) Regulations 2016

And further conforms to the machinery example for which the type examination Certificate No. BM 50205859 and AN 50205827, have been issued by TUV Rheinland LGA Products GmbH, Tillystrasse 2, 90431, Nurnberg.

I hereby declare that equipment named above has been tested and found to comply with the relevant sections of the above referenced specifications. The machinery complies with all essential requirements of the directives and regulations.

Signed: R Cook Dated: 01/10/2020 Location: Leicestershire

Richard Cook, Director

Please dispose of packaging for the product in a responsible manner. It is suitable for recycling. Help to protect the environment, take the packaging to the local amenity tip and place into the appropriate recycling bin.

Only for EU countries

Do not dispose of electric tools together with household waste material!
In observance of European Directive 2002/96/EC on waste electrical and electronic equipment (EEE) and its implementation in accordance with national law, electric tools that have reached the end of their life must be collected separately and returned to an environmentally compatible recycling facility.
Your local refuse amenity will have a separate collection area for EEE goods.

DRAWING A

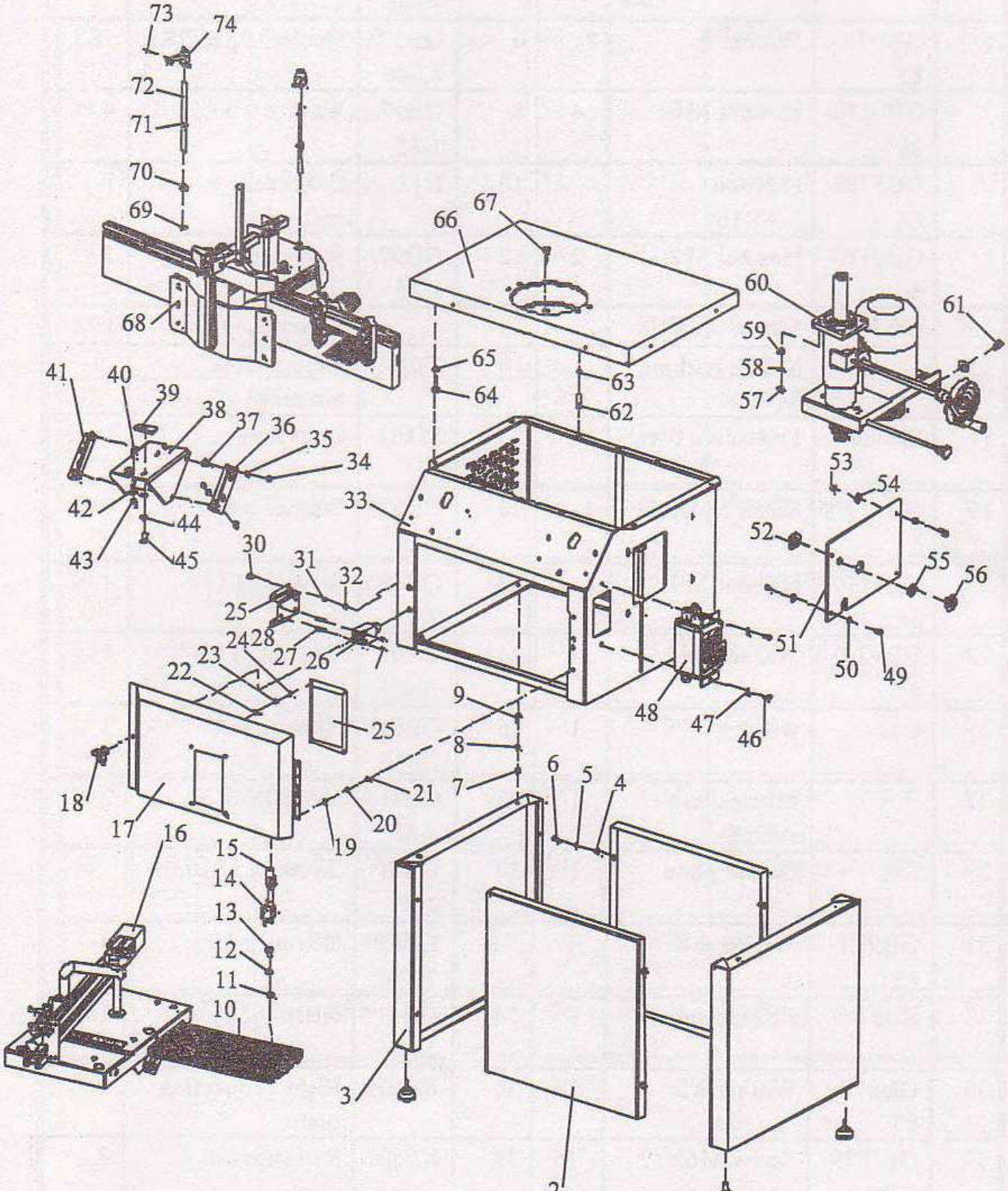
73
74
72
71
70
69
68
67
66
60
61
59
58
57
65
64
63
62
41
40
39
38
37
36
35
34
42
44
43
45
33
53
54
52
55
56
51
50
49
30
31
32
25
28
24
27
26
23
22
48
47
46
9
8
7
6
5
4
25
18
17
16
21
20
19
15
14
13
12
11
10
3
2

Parts List A

Part No.	Description		Part No.	Description
A01	Underprop		A02	Linking Plate
A03	Supporting Plate		A04	Hex Nut M6
A05	Washer M6		A06	Hex Bolt M6 x 16mm
A07	Hex Nut M6		A08	Washer M6
A09	Hex Bolt M6 x 16mm		A10	Guide Rail
A11	Hex Nut M8		A12	Washer M8
A13	Screw M8 x 10mm		A14	Power Plug
A15	Metric Bushing M16		A16	Sliding Table Assembly
A17	Protective Cover		A18	Door knob
A19	Screw M4 x 10mm		A20	Washer M4
A21	Hex Nut M4		A22	Screw M4 x 10mm
A23	Washer M4		A24	Hex Nut M4
A25	Window		A26	Hex Nut M4
A27	Interlocking Switch		A28	Screw M4 x 30mm
A29	Switch Plate		A30	Screw M5 x 10mm
A31	Washer M5		A32	Hex Nut M5
A33	Box Assembly		A34	Hex Nut M6
A35	Washer M5		A36	Right Supporting Plate
A37	Screw M6 x 12mm		A38	Rail Support
A39	Locating Block		A40	Hex Bolt M6 x 16mm
A41	Left Supporting Plate		A42	Large Washer M6
A43	Hex Nut M6		A44	Washer M8
A45	Hex Bolt M8 x 10mm		A46	Screw M6 x 16mm
A47	Washer M6		A48	Switch KJD18/5T
A49	Screw M6 x 16mm		A50	Washer M6
A51	Moulding Faceplate		A52	Hex Bush
A53	Hex Nut M6		A54	Large Washer M6
A55	Bush		A56	Hex Nut
A57	Hex Nut M8		A58	Spring Washer M8
A59	Washer M8		A60	Moulder Assembly
A61	Hex Flange Bolt		A62	Screw M6 x 25mm
A63	Washer M6		A64	Screw M8 x 25mm
A65	Washer M8		A66	Table
A67	Screw M8 x 30mm		A68	Exhaustion Socket Assembly
A69	Washer M8		A70	Hex Flange Nut M8
A71	Locking Nut M8		A72	Locking Pole
A73	Spring Pin 3 x 16mm		A74	Locking Handle

PARTS DIAGRAM B

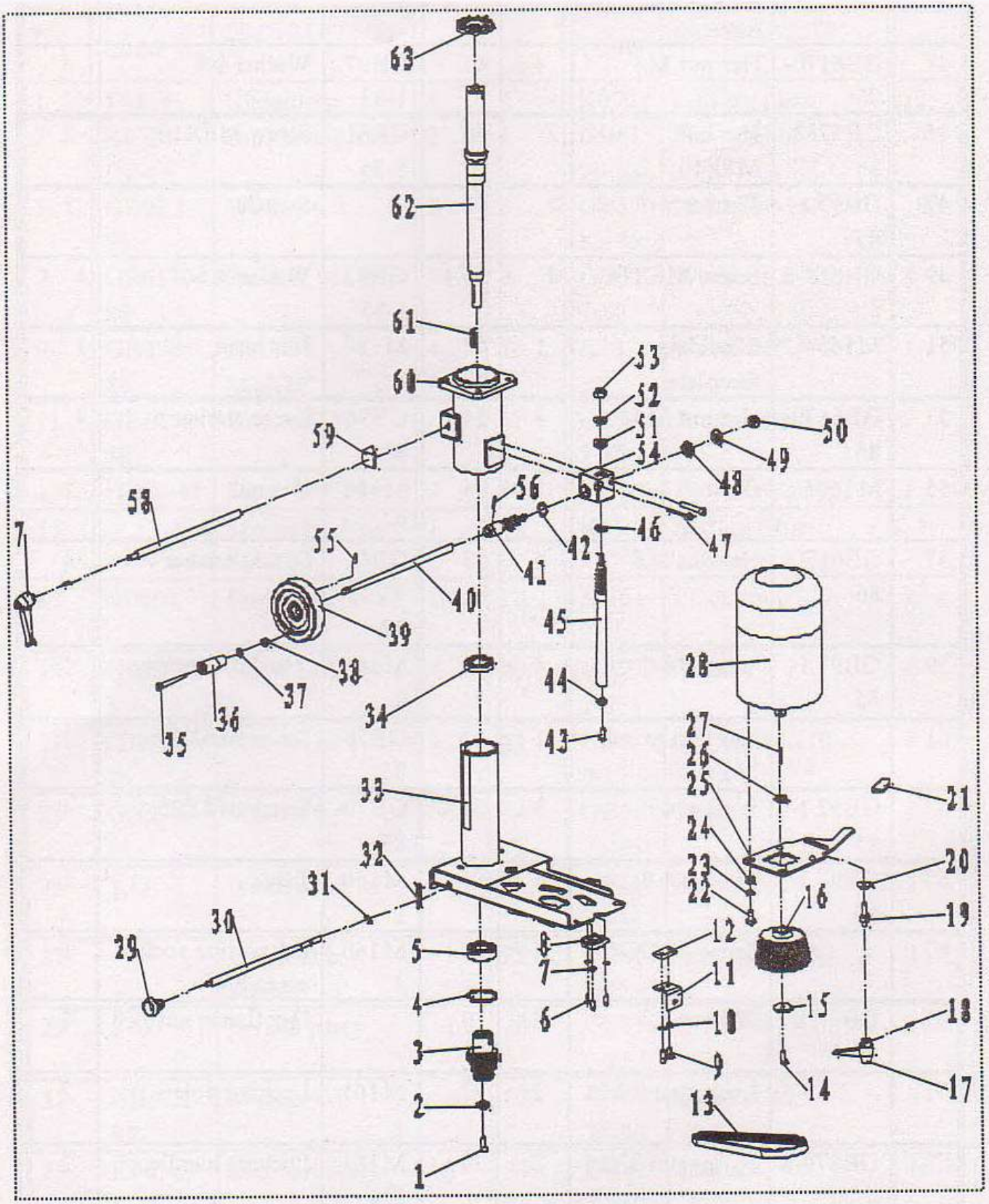

Parts List B

Part No.	Description		Part No.	Description
B01	Screw M6 x 16mm		B02	Circular Washer
B03	Driven Pully		B04	C' Ring 47mm
B05	Bearing 6204		B06	Hex Bolt M5 x 12mm
B07	Washer M5		B08	Nut Bush
B09	Screw M6 x 14mm		B10	Washer M6
B11	Angle Plate		B12	Plate
B13	Cuneal Belt		B14	Screw M6 x 16mm
B15	Large Washer		B16	Motor Pulley
B17	Locking Handle		B18	Spring Pin 3 x 16mm
B19	Locking Bolt		B20	Large Washer M8
B21	Handle Coat		B22	Hex Bolt M8 x 16mm
B23	Washer M8		B24	Space bush
B25	Rotation Plate		B26	C Ring 19mm
B27	Key 6 x 25mm		B28	Motor
B29	Handgrip		B30	Locking Pole
B31	E' Ring 6mm		B32	Spring Clip
B33	Motor Rack		B34	Bearing 6005
B35	Screw M6 x 60mm		B36	Handle Bush
B37	Washer M6		B38	Hex Nut M6
B39	Hand Wheel		B40	Rotation Pole
B41	Gear Shaft		B42	C Ring 18mm
B43	Hex Bolt M6 x 16mm		B44	Large Washer M6
B45	Gear Shaft		B46	C Ring 18mm
B47	Screw M6 x 45mm		B48	Gear Bush
B49	Bearing		B50	Hex Locking Nut M10
B51	Gear Bush		B52	Bearing
B53	Hex Locking Nut M10		B54	Gear Box
B55	Set Screw M6 x 12mm		B56	Spring Pin 3 x 20mm
B57	Locking Handle		B60	Oriented Stand
B61	Key 5 x 30mm		B62	Spindle
B63	Fan Cap		B62C	Top Spindle
B62D	Routing Collet 1/2" Diameter		WASH	Set of Spacers & Locking Bolt

PARTS DRAWING C

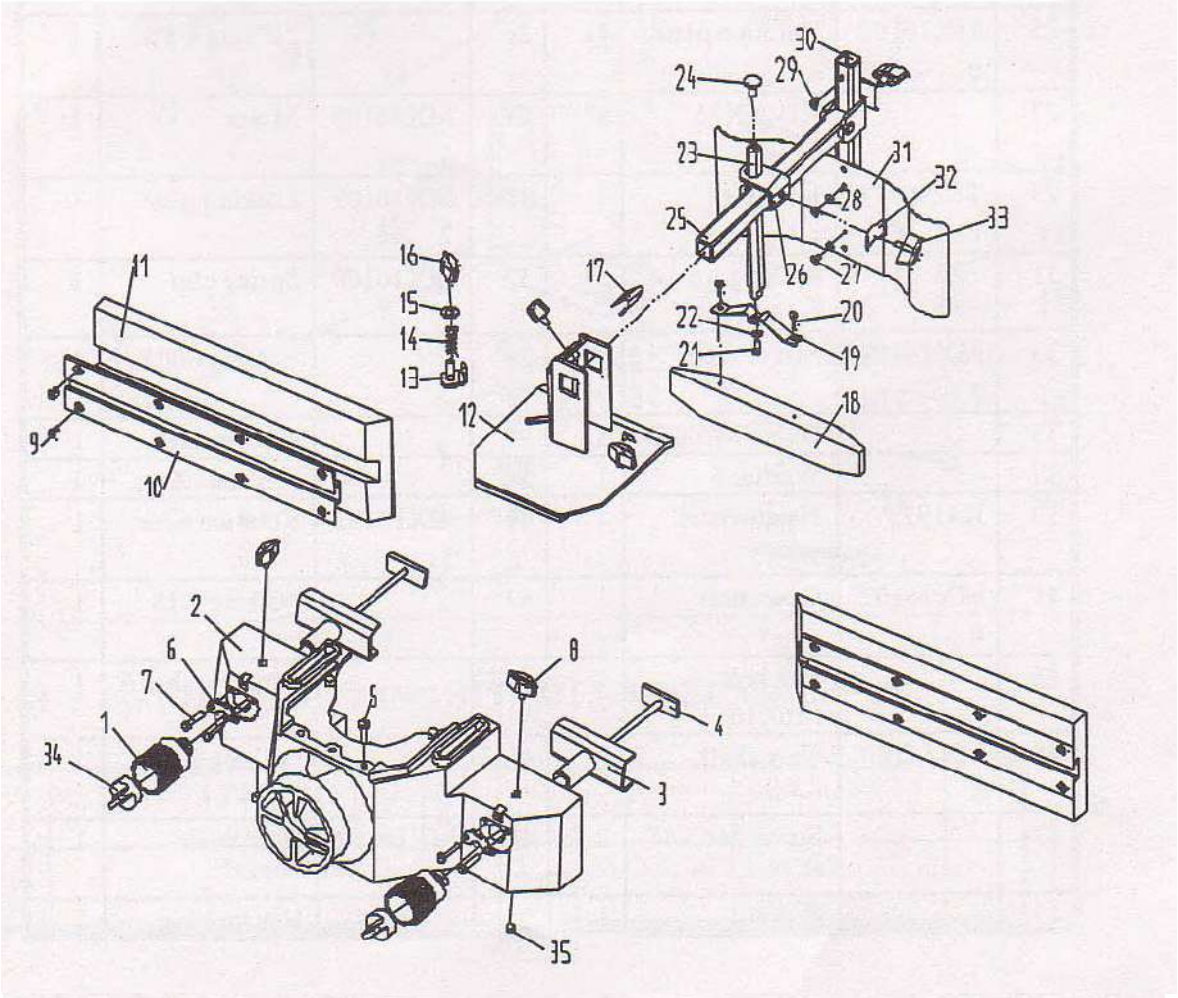

PARTS DIAGRAM D

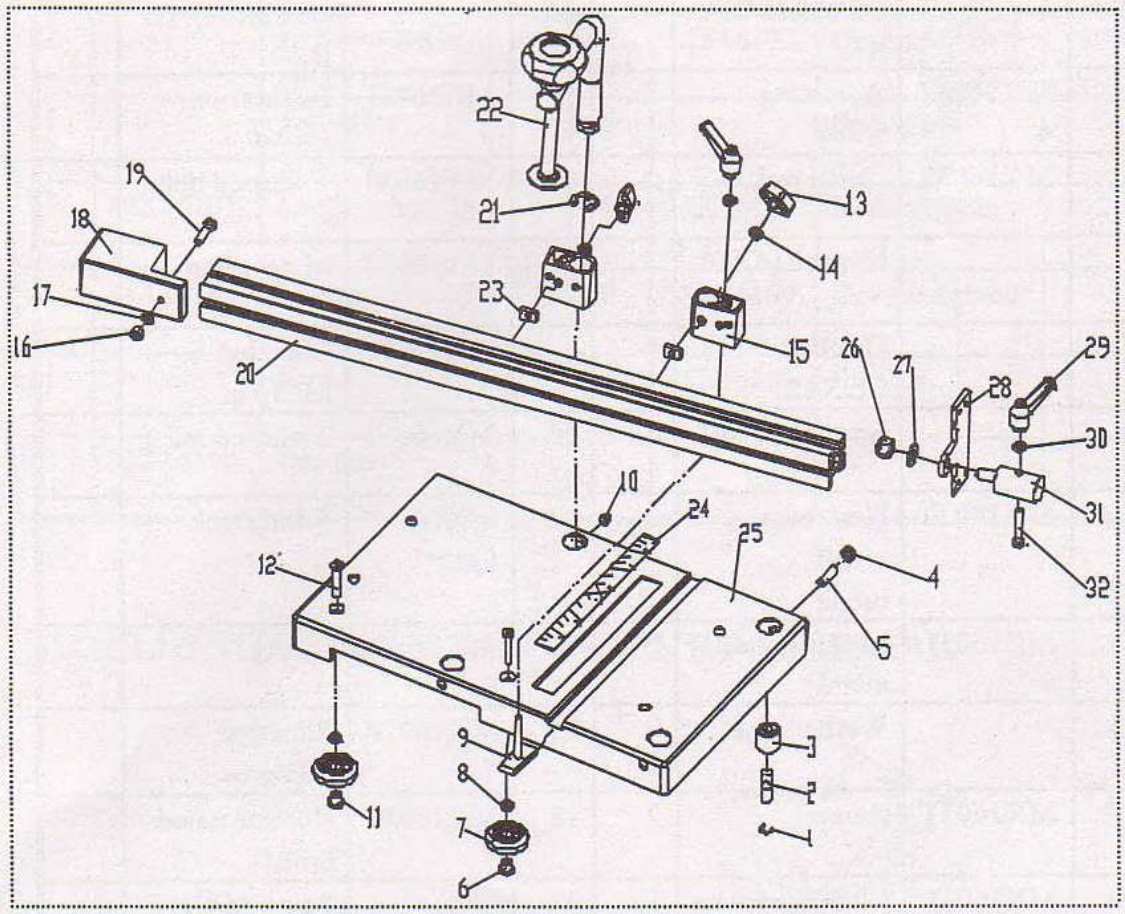

Parts List C

Part No.	Description		Part No.	Description
C01	Adjusting Wheel		C02	Exhaustion Socket
C03	Guide Rack		C04	T-Shaped Bolt
C05	Screw M6 x 10mm		C06	Metal Plate
C07	Hex Bolt M5 x 12mm		C08	Rhombic Handgrip
C11	Aluminium Fence		C12	Turing Rack
C13	Locking Sheet Metal		C14	Spring
C15	Washer M8		C16	Rhombic Handgrip
C17	Saucer		C18A	Vertical Hold Down
			C24	Bolt M8 x 10mm
C25	Square Leader Assembly		C26	Capstan
C27	Screw M4 x 6mm		C28	Washer M4
C29	Screw M4 x 6mm		C30	Standpipe
C31	Spring Protective Broad		C32	Locking Patch
C33	Rhombic Handgrip		C34	Locking Knob
C35	Set Screw M8 x 10mm			

Parts List D

Part No.	Description		Part No.	Description
D01	C-Shaped Ring		D02	Sliding Axle
D03	Eccentric Bush		D04	Hex Thin Nut M8
D05	Set Screw M8 x 25mm		D06	Eccentric Nut
D07	Trolley		D08	Washer M6
D09	T-Shaped Bolt		D10	Set Screw M8 x 10mm
D11	Homocentric Nut		D12	Socket Countersunk Screw M6 x 35mm
D13	Rhombic Handgrip		D14	Washer M6
D15	Connecting Block		D16	Hex Nut M6
D17	Washer M6		D18	Wood Block
D19	Hex Bolt M6 x 25mm		D20	Angle Fence
D21	E-Ring 12mm		D22	Press Handle

charnwood

Woodworking machinery at its best!

Updated October 2020

Charnwood, Cedar Court, Walker Road,
Hilltop Industrial Estate, Bardon Hill, Leicestershire, LE67 1TU

Tel. 01530 516 926 Fax. 01530 516 929
email: sales@charnwood.net website: www.charnwood.net